Australian National University

High Energy Stripper Disease in the 14UD

Problem, solution, and future developments for the High Energy Stripper in the 14UD

Introduction- Presenter

- Technician at ANU
- Started at ANU Nuclear Physics in 2011
- Background in Industrial Design and Mechanical Engineering
- 2nd ATF, 1st SNEAP

The problem

- 14UD would drop ~2MV while beam was accelerated.
- Conditioned to beyond 15 MV without beam.
- Shorting rods used to pinpoint problem to U19
- U19 contained High Energy Stripper
- Suspected HE Stripper foil debris

Strippers in the 14UD

- 14UD has three strippers
  - There are two in the terminal (gas and foil)
  - The high energy stripper is located in U19 (foil)

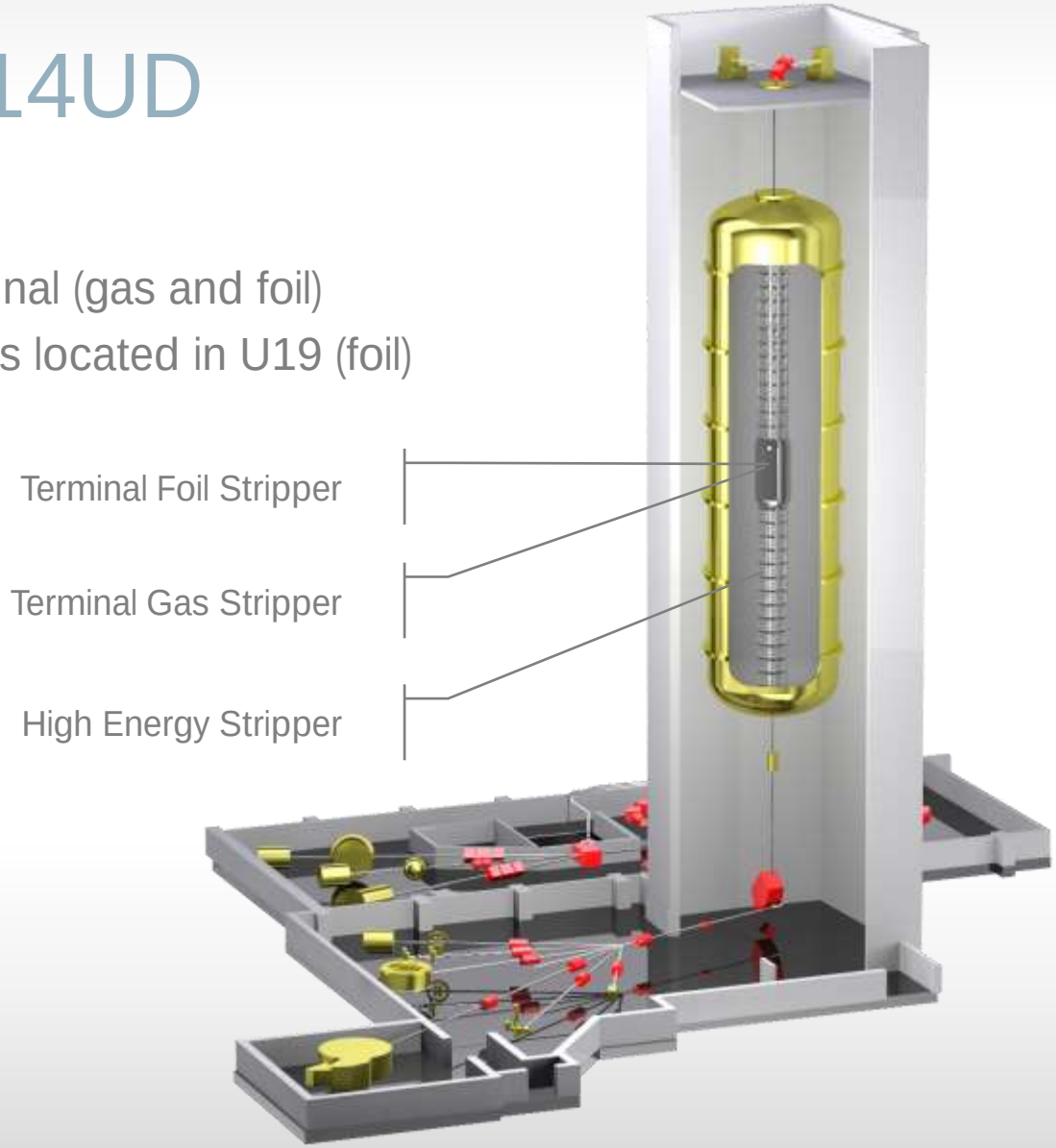

Background on strippers

- Tandem accelerator uses carbon foils or gas are used to strip electrons from the negatively charged.
- High energy (aka second) strippers are used to strip more electrons from the beam.
- Eg. Ni beam
  - 11+ charge state from the terminal stripper
    - 180MeV at accelerator exit
  - 18+ charge state from the HE stripper
    - 250MeV at accelerator exit.

Removing the stripper and tubes

- Removal of tubes and stripper required removal of the terminal bellows.
- With the bellows removed, the jack fixture could be fitted to create clearance, and the tubes removed.

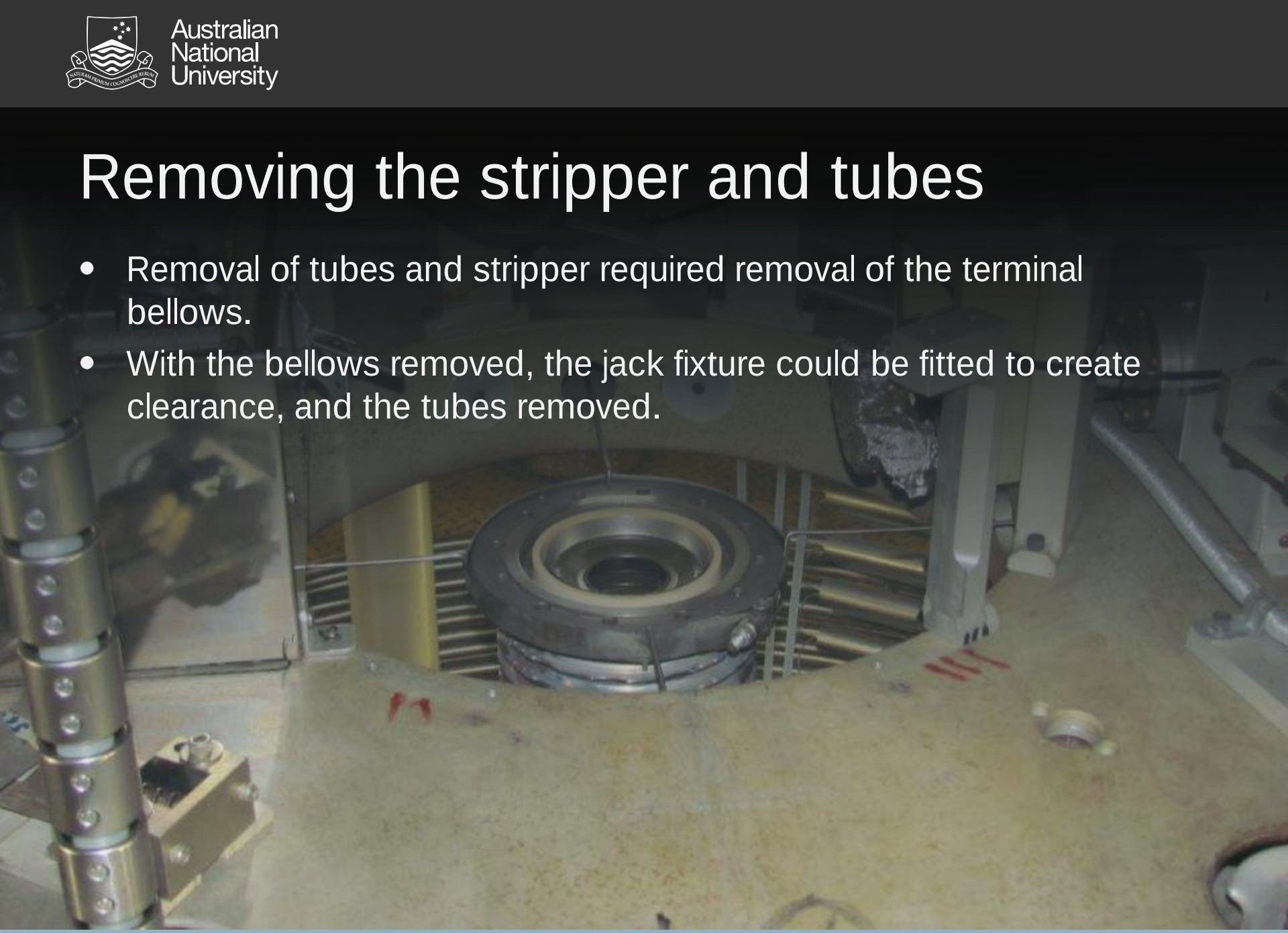

Stripper dissection

- Three issues found-
  - Aperture marking and radiation
  - Tube discolouration
  - Foil debris

Stripper dissection- Aperture

- Marking on the top aperture.
- Radiation ~20uSv/hr.
- Beam can release electrons from a contaminated and/or activated surface.

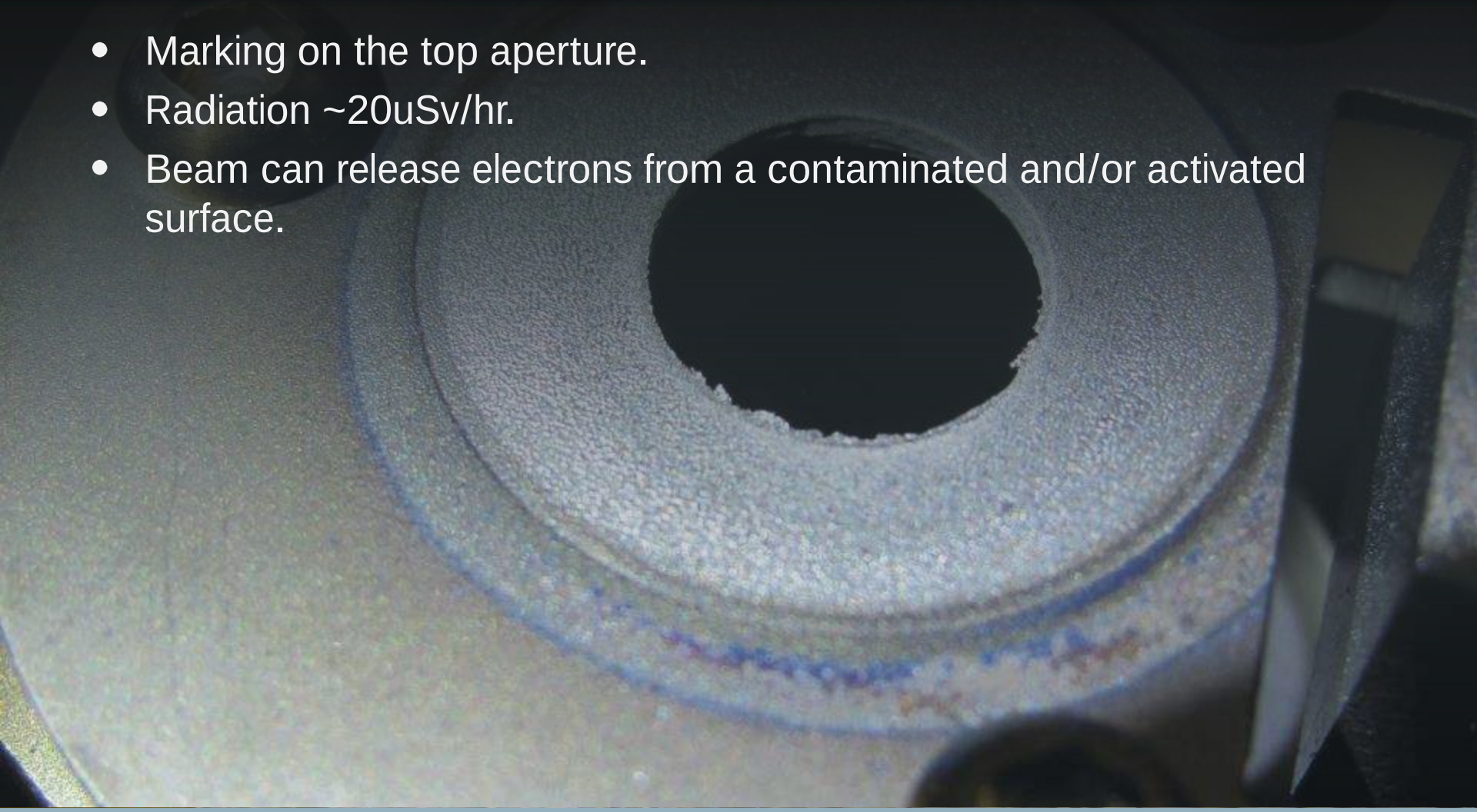

Stripper dissection- Tubes

- ‘Rainbowing’ on underside of electrodes above the stripper.
- Indication of backstreaming of electrons.
- Electron backstreaming explains beam loading.

Stripper dissection- Debris

- Fragments of broken foils were found littered through the stripper.
- Tubes blown with nitrogen to confirm presence of debris.
- Beam striking foil fragments can also release electrons.

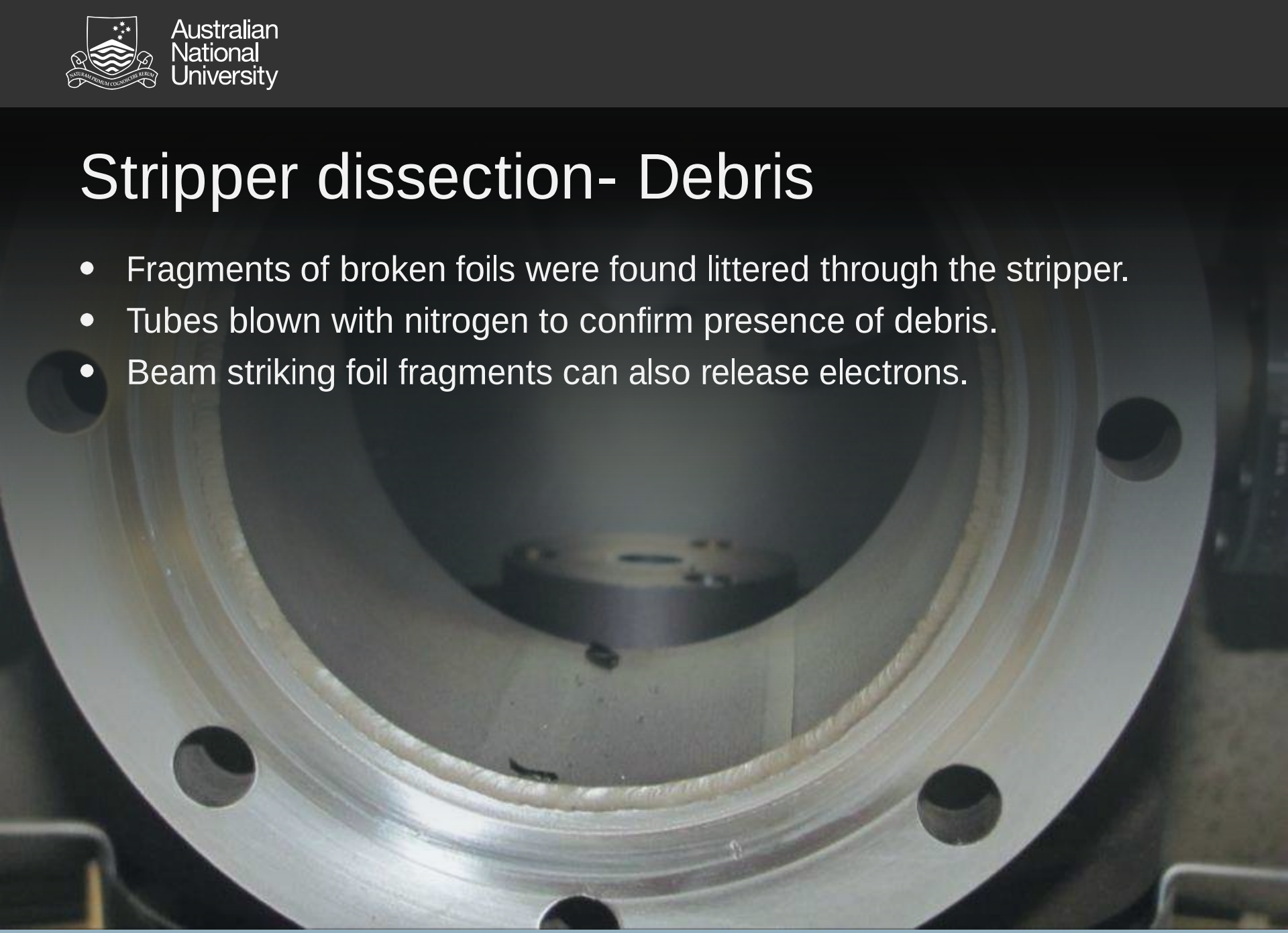

Findings and plan

- Clear that the beam was striking the top aperture on the HE stripper, creating a backstream of electrons and causing the beam loading issue seen during operation.
- Replace tubes.
- Redesign stripper.

Australian National University

Replacement Aperture

- Wire cut Tantalum.

Stripper installation

- 3x ‘clean’ tubes installed in U20.
- HE stripper installed.
- 2x ‘clean’ tubes installed.

14UD performance post stripper fix

- Conditioned to 14MV, long spark recovery.
- Traces of SF_6 found in the vacuum space.
- Found leak in terminal bellows joint.
- Slowly recovered and operating above 14.7MV
- No beam loading.
- Problem solved… sort of.

Future improvements

- Still an underlying design problem.
- Design and manufacture a new stripper.
- Three areas for improvement:
  - Aperture arrangement
  - Bias arrangement
  - Foil containment

Current design

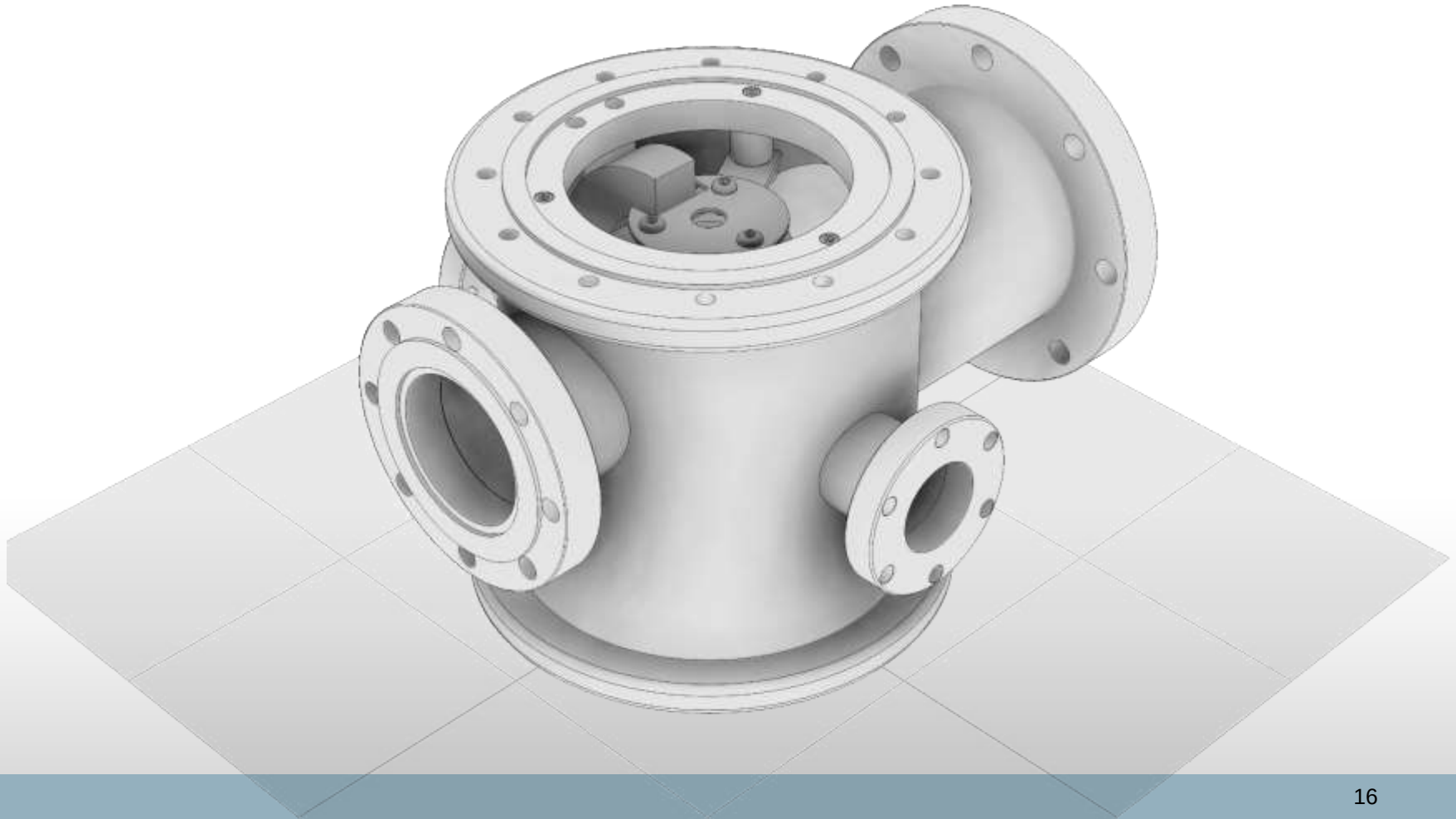

Aperture arrangement

- Currently, the aperture arrangement is-

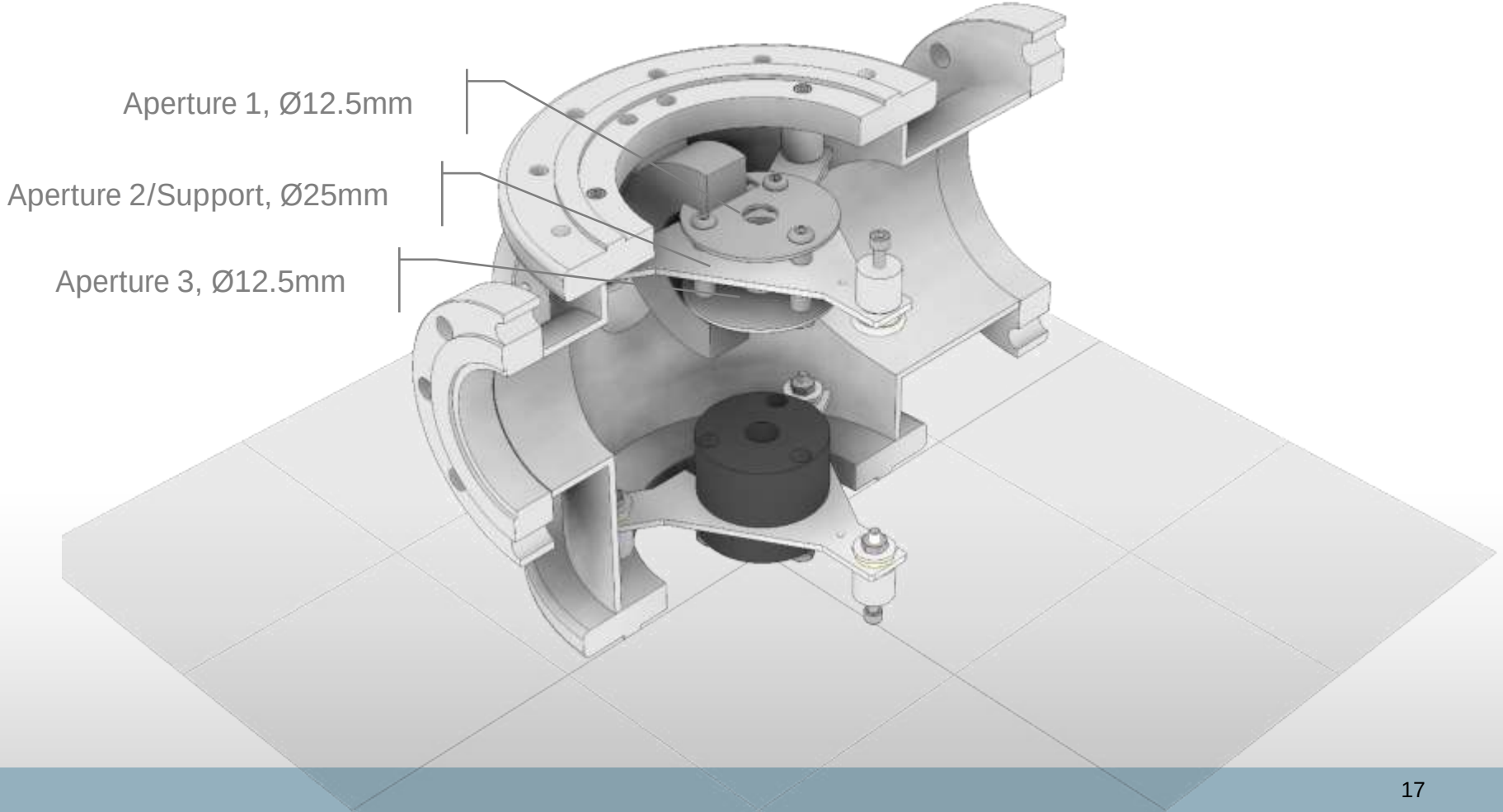

Aperture arrangement

- In this arrangement, the second and third stripper are superfluous

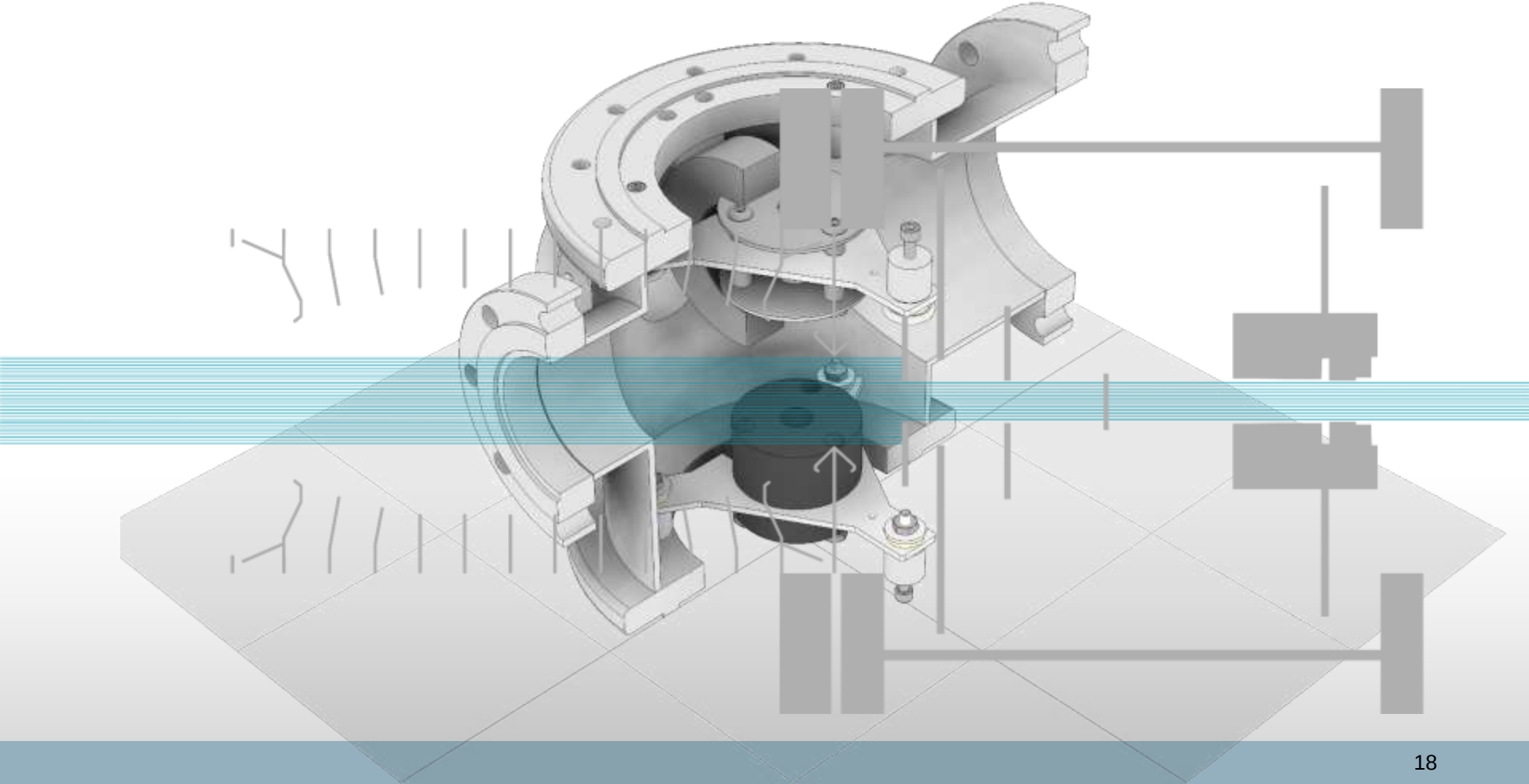

Aperture arrangement

- Swap first and second apertures.
- Beam can enter the stripper and electrons suppressed

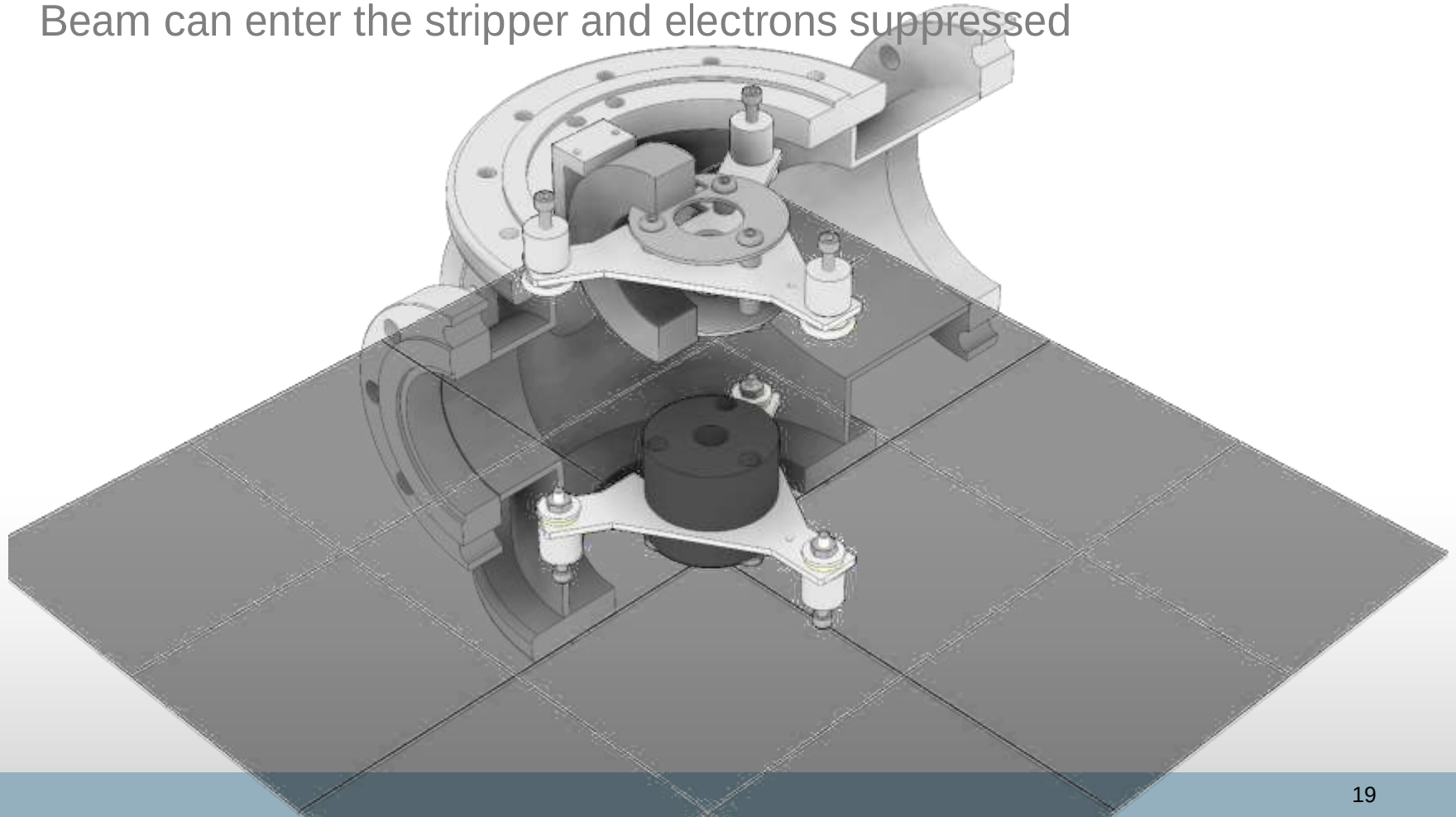

Bias arrangement

- All apertures currently biased by -5kV.
- Electrons on top aperture and foil drawn up by positive gradient to terminal.

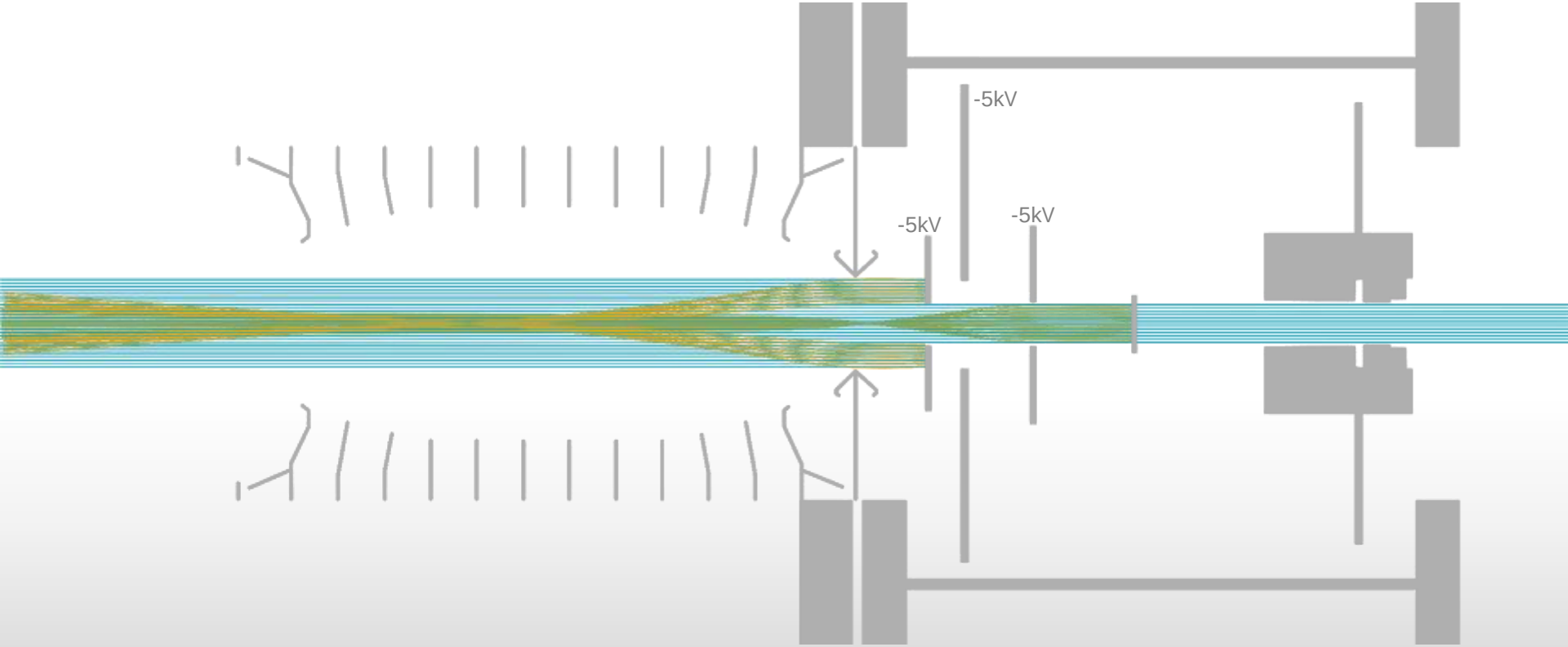

Bias arrangement

- Larger first aperture isolated and biased
- Electrons from second aperture and foil are suppressed.

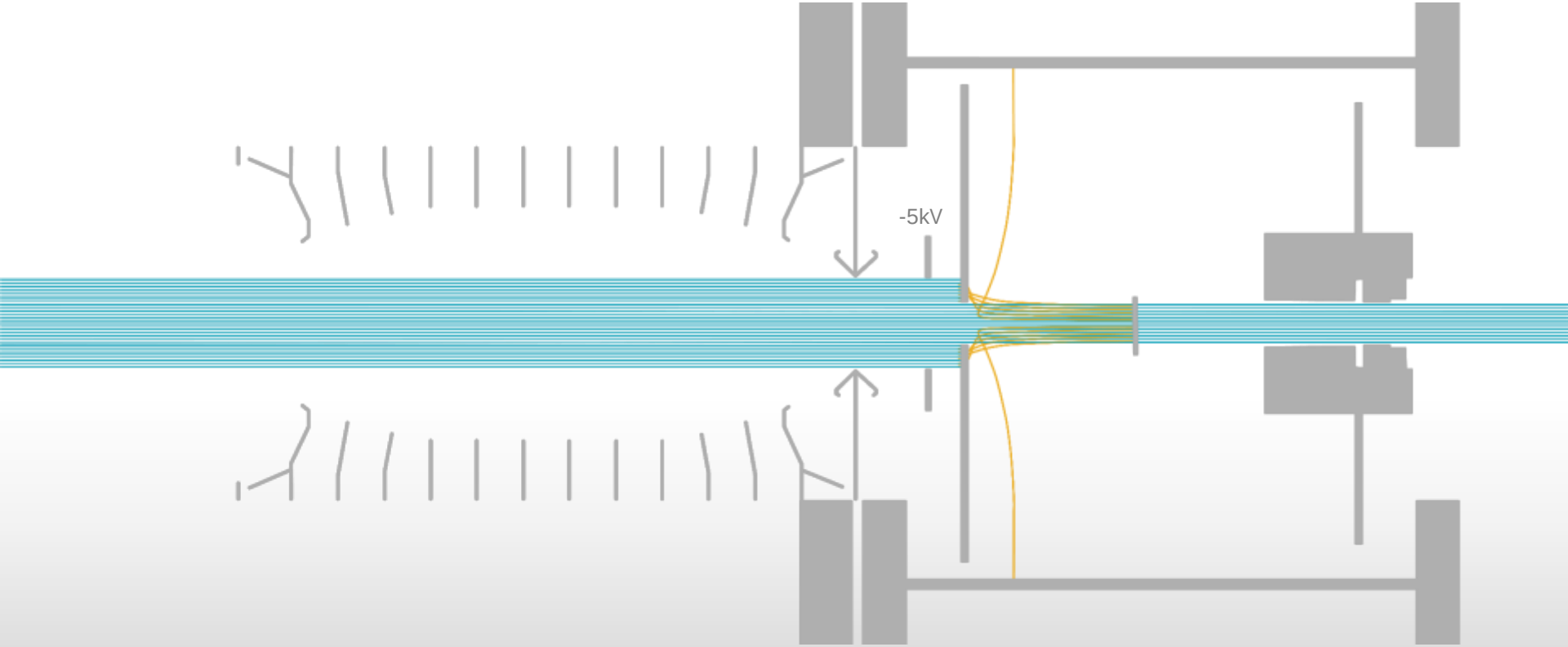

Foil Catcher

- Currently there is nothing to stop foil debris from falling down the acceleration tubes.
- Incorporating a dish in the bottom of the stripper should catch the majority of stray foils.

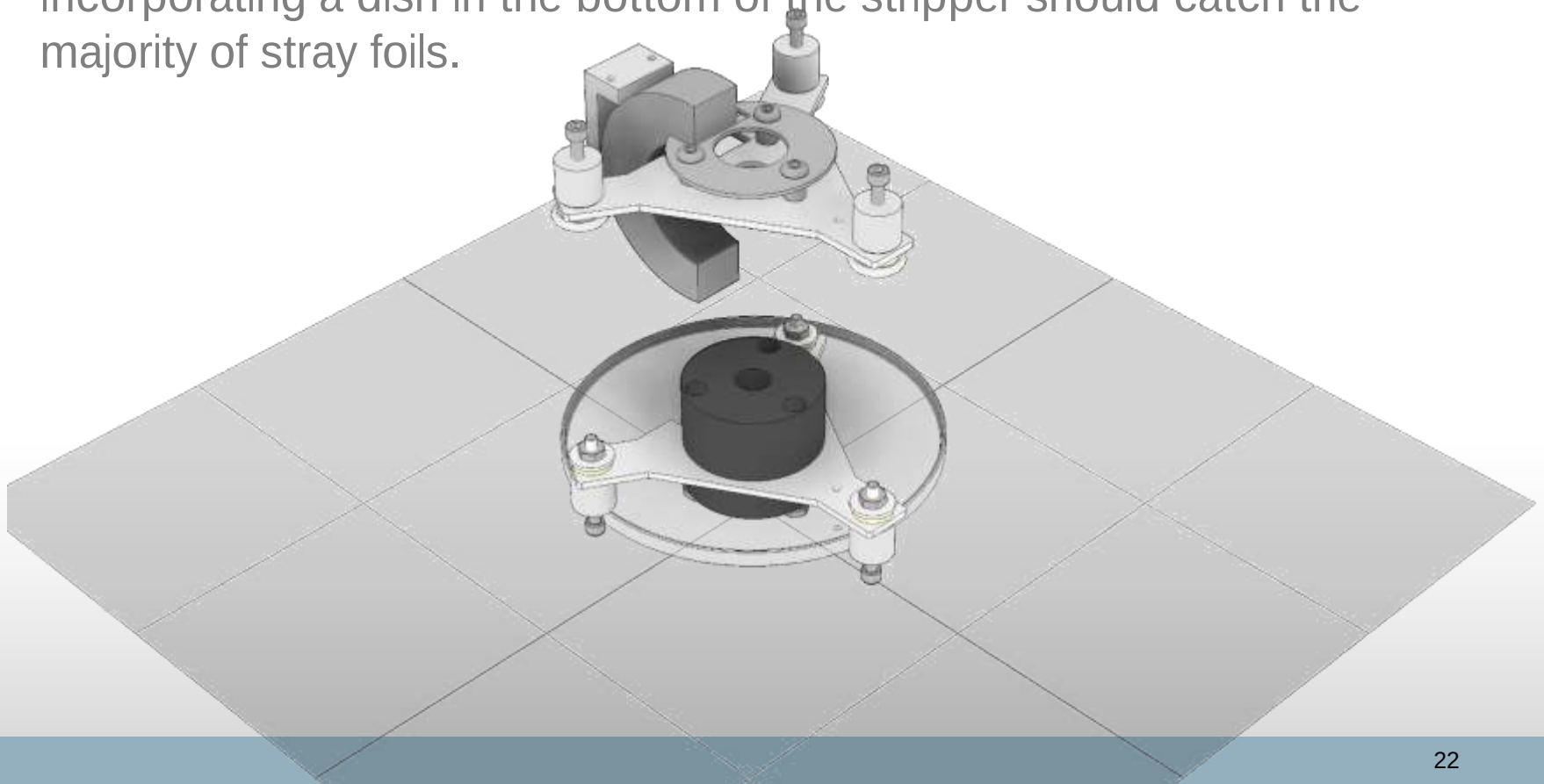

New design

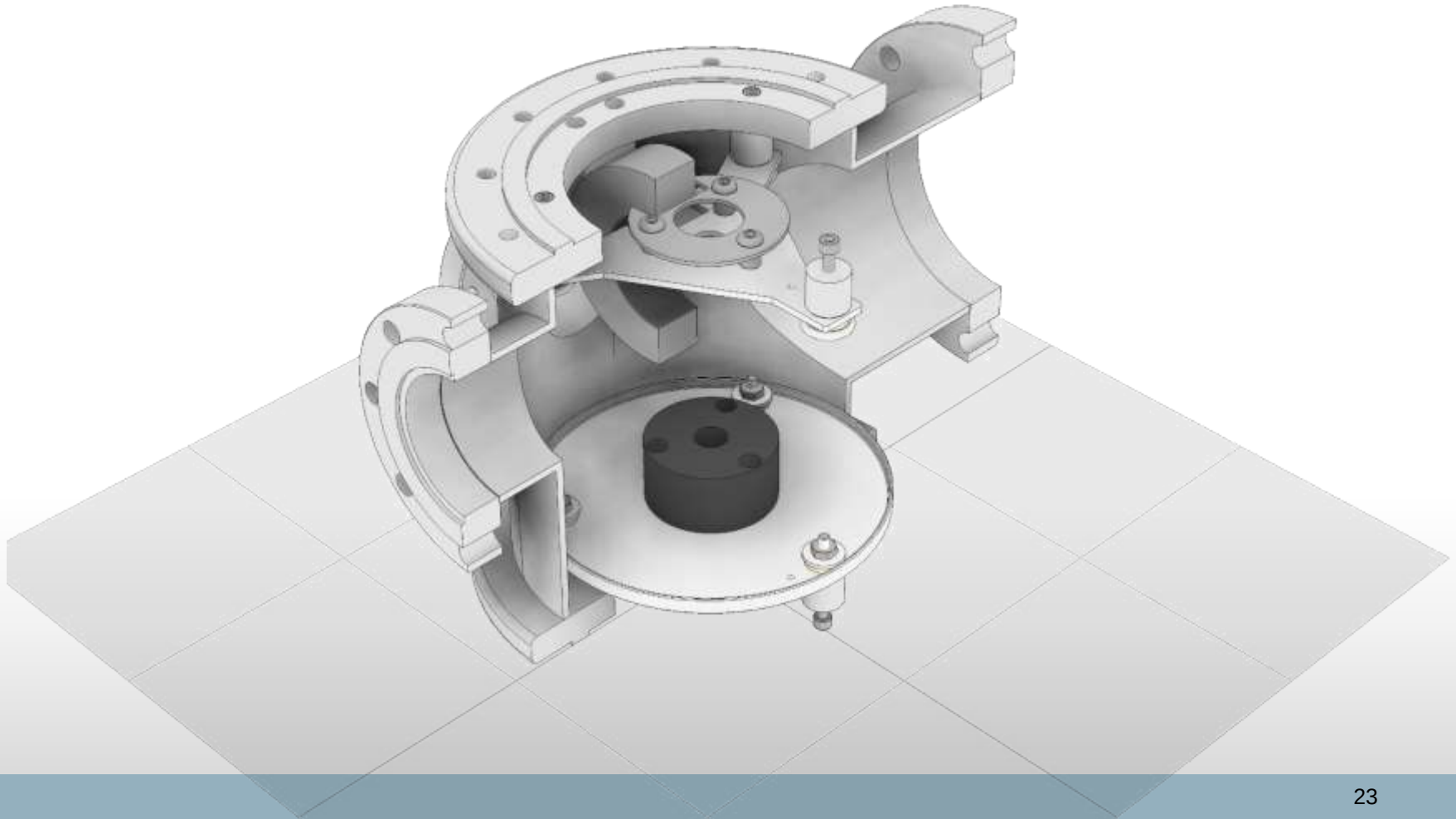

Path Forward

- Measure performance of current stripper.
- Manufacture the new design.
- Install new design on beamline and measure performance.
- Install new design in the accelerator.
- Measure performance and compare
- Rejoice

Thank you